CLINE ALUMINUM DOORS, INC.
112 32nd AVENUE WEST, BRADENTON, FL 34205-8096
Telephone (800) 648-6736

L. F. SCHMIDT LICENSE No. 43409 STATE OF FLORIDA PROFESSIONAL ENGINEER

Digitally signed by Lyndon F Schmidt
Date: 2023.07.05 09:18:18 -04'00'

This item has been digitally signed and sealed by **L. F. Schmidt, P.E.** on the date adjacent to the seal.

Printed copies of this document are not considered signed and sealed and the signature must be verified on any electronic copies.

THIS PRODUCT APPROVAL IS VALID ONLY FOR THE STATE OF FLORIDA

SERIES 200BE FRP DOOR

OUTSWING "IMPACT"

GENERAL NOTES

1. This product has been evaluated and is in compliance with the 8th Edition (2023) Florida Building Code (FBC) structural requirements excluding the "High Velocity Hurricane Zone" (HVHZ).

2. Product anchors shall be as listed and spaced as shown on details. Anchor embedment to base material shall be beyond wall dressing or stucco.

3. When used in areas requiring wind borne debris protection this product complies with FBC Sections 1609.1.2 & R301.2.1.2 and does not require an impact resistant covering. This product meets missile level "D" and includes Wind Zone 4 as defined in ASTM E 1996 and FBC Sections 1609.1.2.2 & R301.2.1.2.1.

4. For 2x stud framing construction, anchoring of these units shall be the same as that shown for 2x buck masonry construction.

5. Site conditions that deviate from the details of this drawing require further engineering analysis by a licensed engineer or registered architect.

TABLE OF CONTENTS

SHEET#	DESCRIPTION
1	Typical elevations, design pressures & general notes
2	Door panel details and glazing detail
3	Door panel details and glazing detail
4	Horizontal cross sections
5	Vertical cross sections
6	Buck and frame anchoring
7	Bill of materials and components

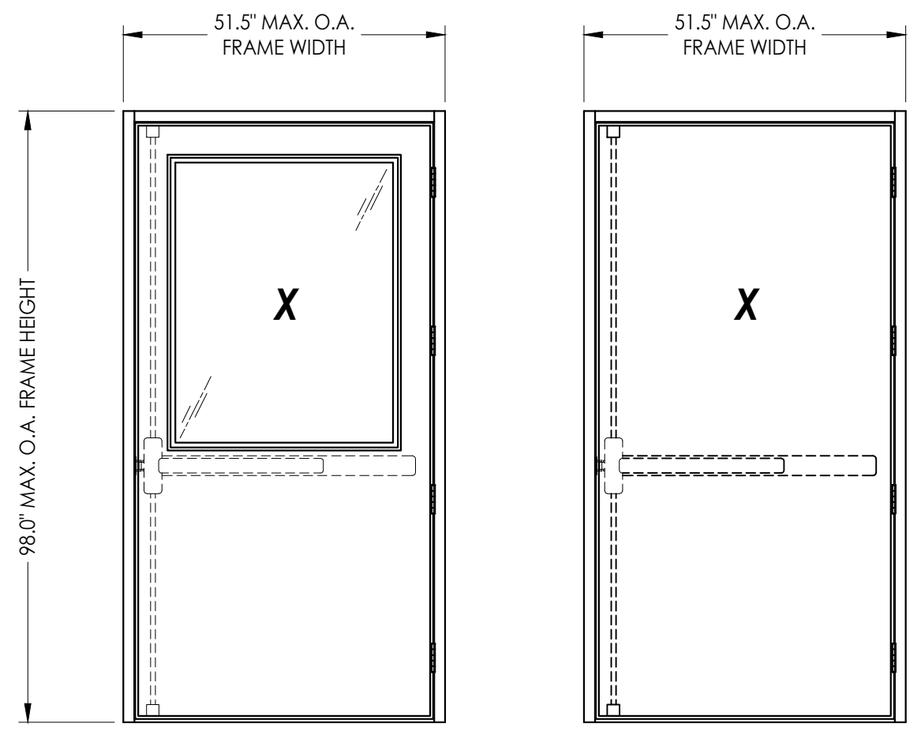

GLAZED DOOR PANEL

OPAQUE DOOR PANEL

LOCK HARDWARE	MAX. FRAME DIMENSION	MAX. DOOR D.L.O. DIMENSION	DESIGN PRESSURE (PSF)	
			POSITIVE	NEGATIVE
CORBIN RUSSWIN FE5400S SERIES MULTI-POINT EXIT DEVICE	40.0" x 88.0"	22.63" X 32.63"	+90.0	-90.0
	51.5" x 98.0"	34.88" X 44.88"	+80.0	-80.0

Documents Prepared By:
Lyndon F. Schmidt
P.E. No. 43409
BUILDING CONSULTANTS, INC.
P.O. Box 230, Valrico, FL 33595
Phone No.: 813.659.9197
FBPE Registry No. 9813

PRODUCT: CLINE DOORS

PART OR ASSEMBLY: TYPICAL ELEVATION, DESIGN PRESSURES & GENERAL NOTES

REVISIONS

NO.	DATE		BY
5	7/05/23	UPDATE TO 8TH ED. (2023) FBC	LFS
4	8/11/20	UPDATE TO 7TH ED. (2020) FBC	DAC
3	7/7/17	UPDATE TO 6TH ED. (2017) FBC	JK
2	9/9/15	ADD OPAQUE DOOR & NEW SIZE	JK
1	1/27/15	UPDATE TO 5TH ED. (2014) FBC	JK

DATE: 9/5/13
SCALE: N.T.S.
DWG. BY: JK
CHK. BY: LFS
DRAWING NO.: FL-6336.5
SHEET 1 OF 7

© 2013 R.W. BUILDING CONSULTANTS INC.

Z:\2023 FBC Drawings\Cline Aluminum Doors\FL-6336 R9\FL-6336.5-8.dwg

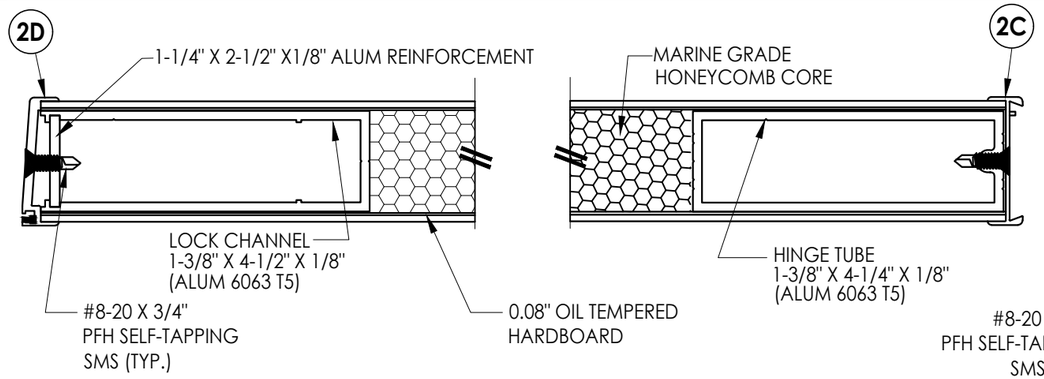

1/2 **HORIZONTAL CROSS SECTION**

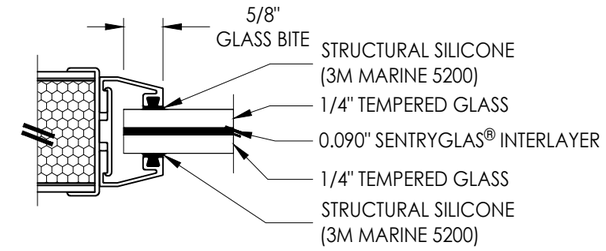

G1 **GLAZING DETAIL**

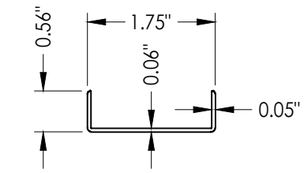

2E **TOP AND BOTTOM CAP**
6063-T5 ALUM.

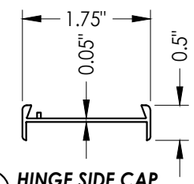

2C **HINGE SIDE CAP**
6063-T5 ALUM.

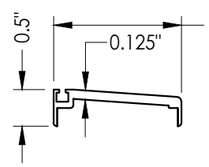

2D **LATCH SIDE CAP**
6063-T5 ALUM.

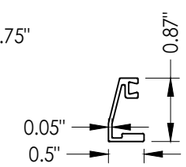

2A **GLAZING BEAD**
6063-T5 ALUM.

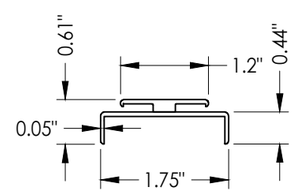

2B **GLAZING BEAD CAP**
6063-T5 ALUM.

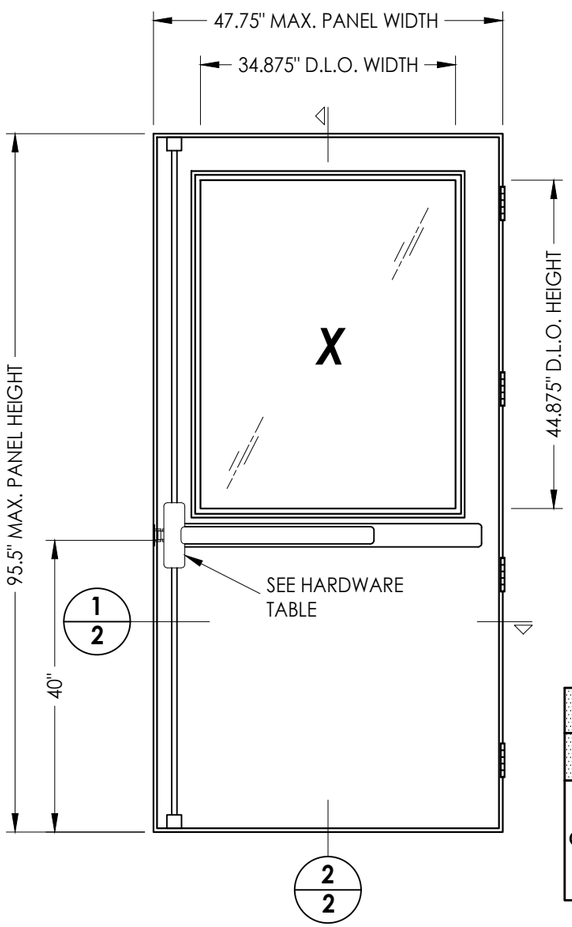

40 **GLAZED DOOR PANEL**

HARDWARE TABLE	
MANUFACTURER	MODEL
CORBIN RUSSWIN	CORBIN RUSSWIN FE5400S SERIES (3-POINT AUTO LATCHING SYSTEM w/ SECUREBOLT® DEADBOLT, SURFACE VERTICAL RODS & ANTI-PRY BRACKET KIT)

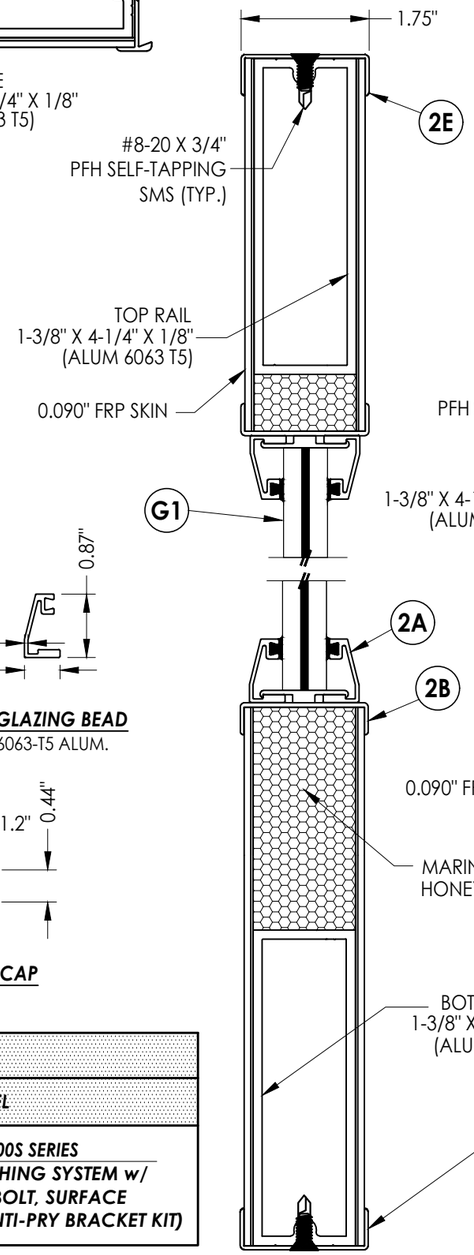

2/2 **VERTICAL CROSS SECTION**
Glazed Shown

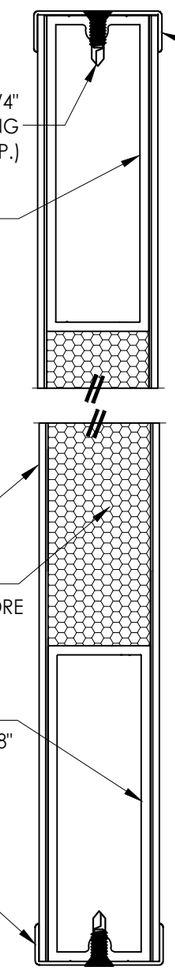

3/2 **VERTICAL CROSS SECTION**
Opaque Shown

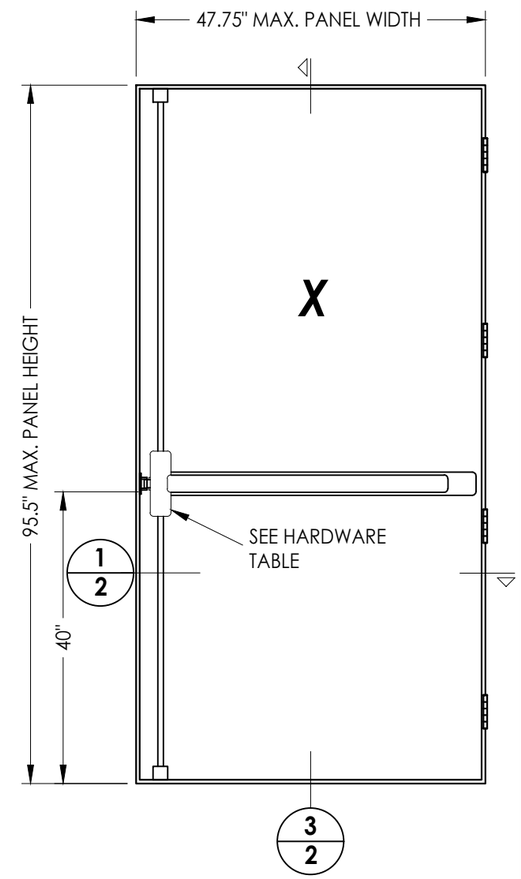

40 **OPAQUE DOOR PANEL**

Documents Prepared By:
Lyndon F. Schmidt
P.E. No. 43409
RW BUILDING CONSULTANTS, INC.
P.O. Box 230, Valrico, FL 33595
Phone No.: 813.659.9197
FBPE Registry No. 9813

PRODUCT: CLINE DOORS

PART OR ASSEMBLY: DOOR PANEL DETAILS AND GLAZING DETAIL

NO.	DATE	REVISIONS	BY
5	7/05/23	UPDATE TO 8TH ED. (2023) FBC	LFS
4	8/11/20	UPDATE TO 7TH ED. (2020) FBC	DAC
3	7/7/17	UPDATE TO 6TH ED. (2017) FBC	JK
2	9/9/15	ADD OPAQUE DOOR & NEW SIZE	JK
1	1/27/15	UPDATE TO 5TH ED. (2014) FBC	JK

DATE: 6/8/11
SCALE: N.T.S.
DWG. BY: JK
CHK. BY: LFS
DRAWING NO.: FL-6336.5
SHEET 2 OF 7

© 2011 R.W. BUILDING CONSULTANTS INC.

Z:\2023 FBC Drawings\Cline Aluminum Doors\FL-6336 R9\FL-6336.5-8.dwg

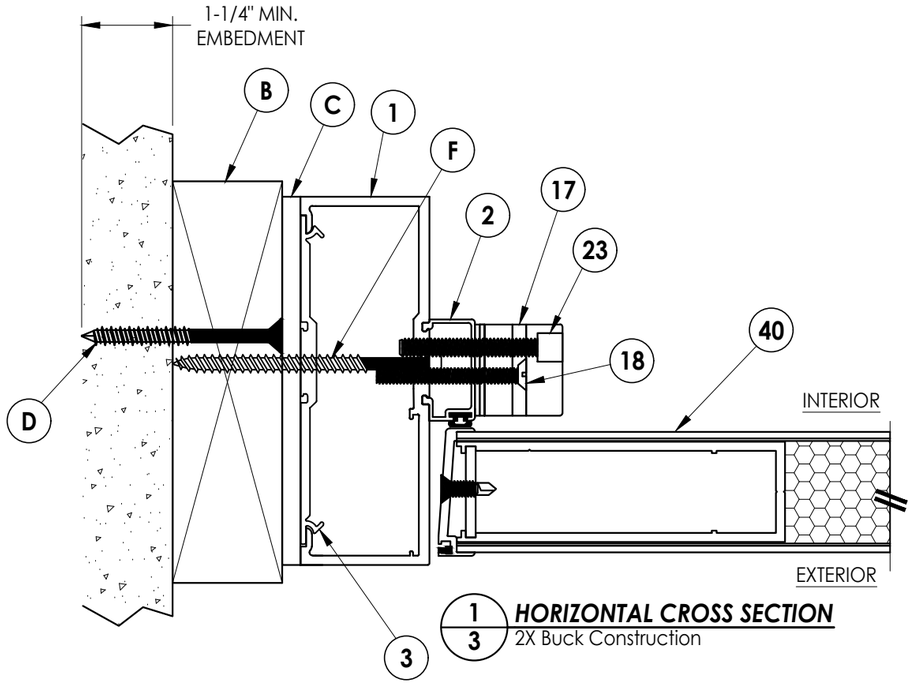

1/3 **HORIZONTAL CROSS SECTION**
2X Buck Construction

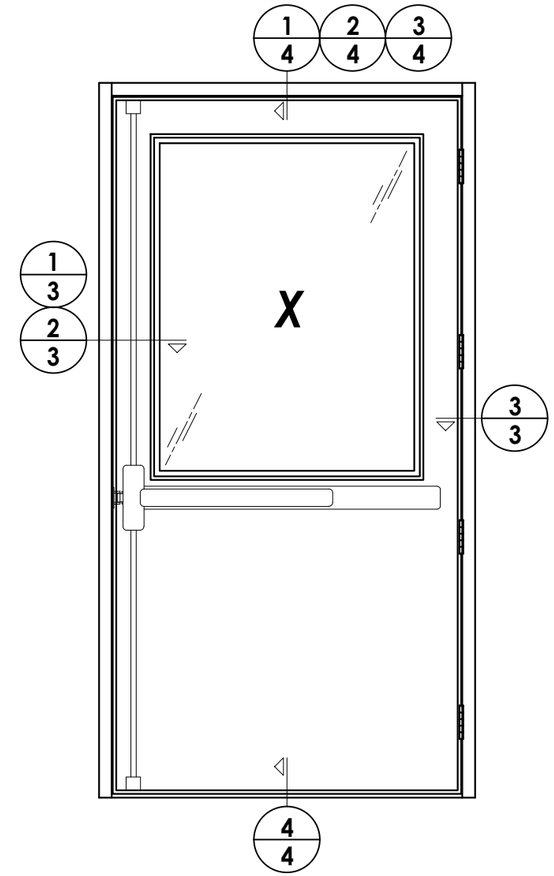

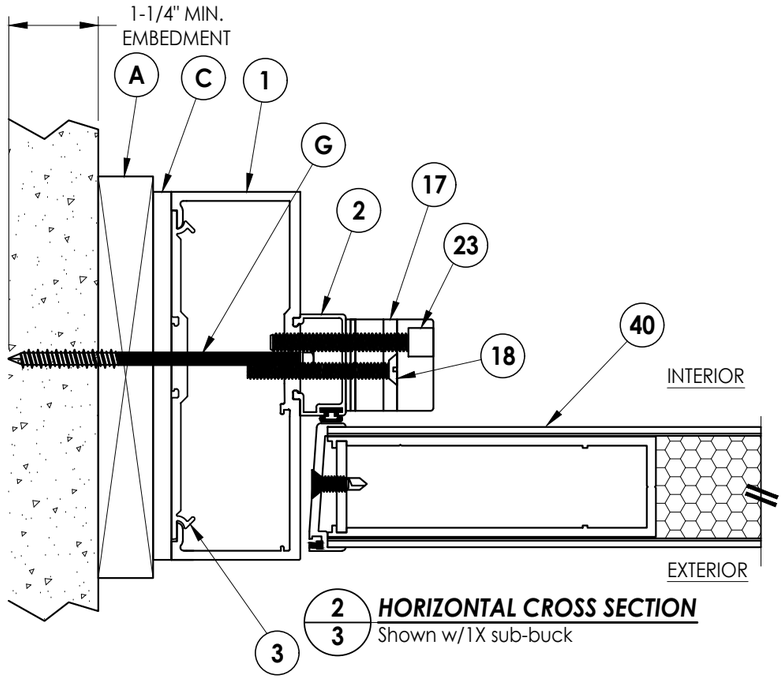

2/3 **HORIZONTAL CROSS SECTION**
Shown w/1X sub-buck

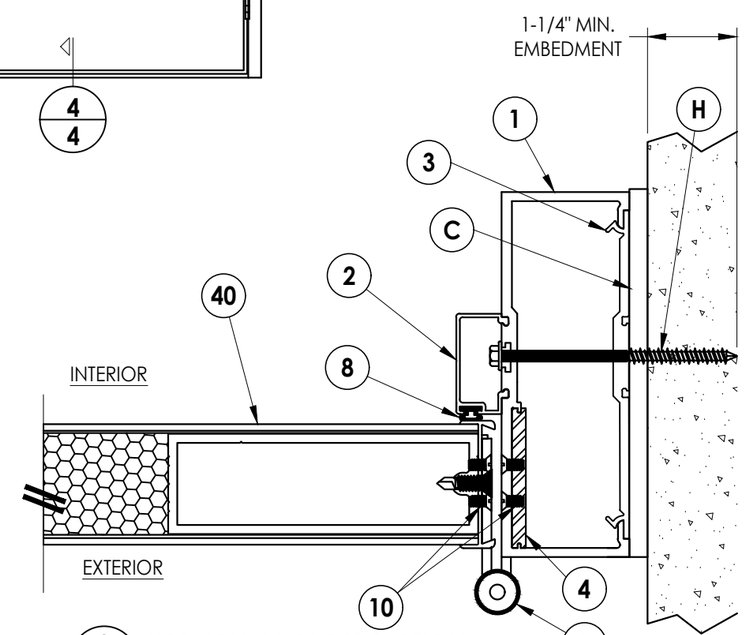

3/3 **HORIZONTAL CROSS SECTION**
Direct to Masonry

Documents Prepared By:
Lyndon F. Schmidt
P.E. No. 43409

RW BUILDING CONSULTANTS, INC.
P.O. Box 230, Valrico, FL 33595
Phone No.: 813.659.9197
FBPE Registry No. 9813

PRODUCT: CLINE DOORS

PART OR ASSEMBLY: HORIZONTAL CROSS SECTIONS

REVISIONS

NO.	DATE		BY
5	7/05/23	UPDATE TO 8TH ED. (2023) FBC	LFS
4	8/11/20	UPDATE TO 7TH ED. (2020) FBC	DAC
3	7/7/17	UPDATE TO 6TH ED. (2017) FBC	JK
2	9/9/15	ADD OPAQUE DOOR & NEW SIZE	JK
1	1/27/15	UPDATE TO 5TH ED. (2014) FBC	JK

DATE: 9/5/13
SCALE: N.T.S.
DWG. BY: JK
CHK. BY: LFS
DRAWING NO.: FL-6336.5
SHEET 3 OF 7

© 2013 R.W. Building Consultants Inc.

Z:\2023 FBC Drawings\Cline Aluminum Doors\FL-6336 R9\FL-6336.5-8.dwg

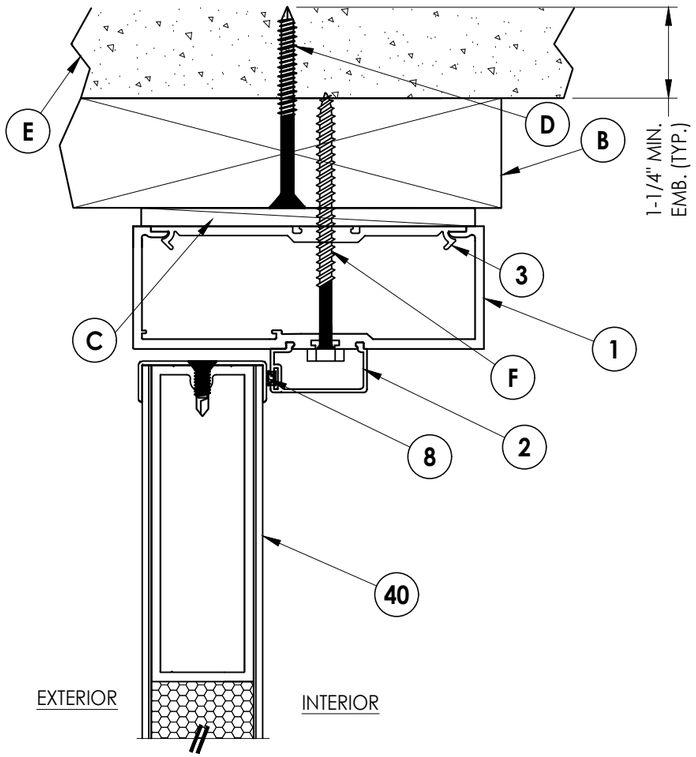

1/4 VERTICAL CROSS SECTION
2X Buck Construction

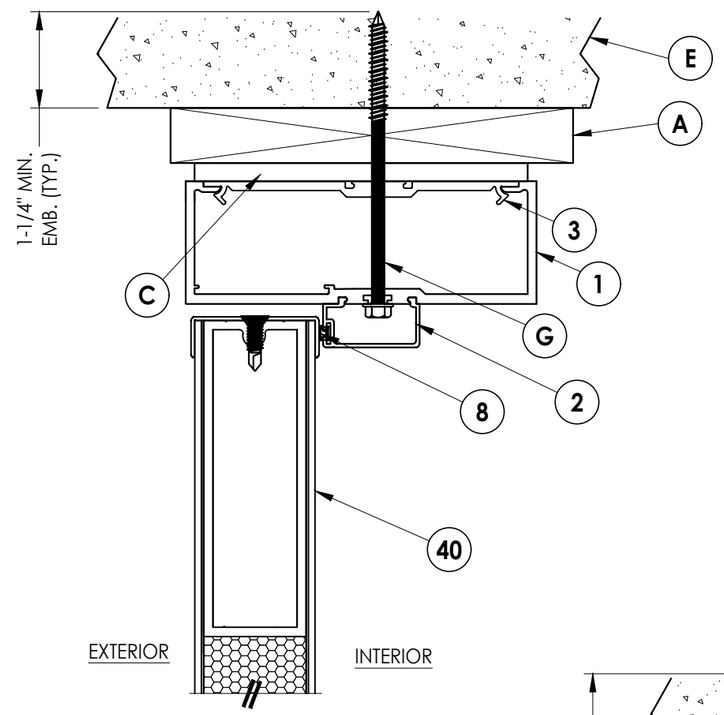

2/4 VERTICAL CROSS SECTION
Shown w/1X sub-buck

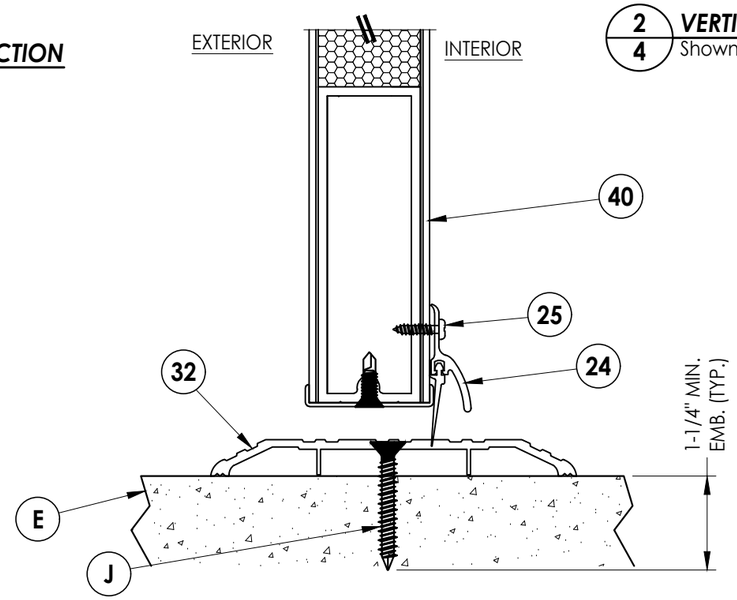

4/4 VERTICAL CROSS SECTION

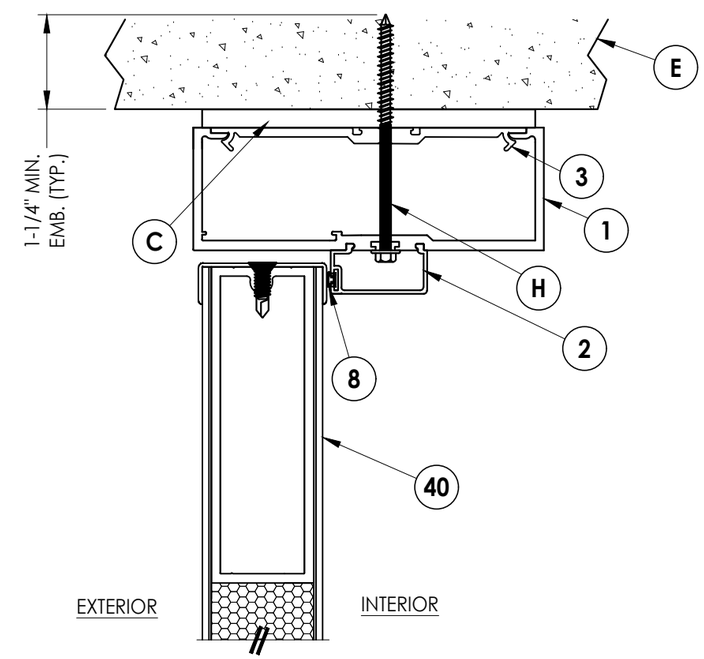

3/4 VERTICAL CROSS SECTION
Direct to Masonry

Z:\2023 FBC Drawings\Cline Aluminum Doors\FL-6336 R9\FL-6336.5-8.dwg

Documents Prepared By:
Lyndon F. Schmidt
P.E. No. 43409

RW BUILDING CONSULTANTS, INC.
P.O. Box 230, Valrico, FL 33595
Phone No.: 813.659.9197
FBPE Registry No. 9813

PRODUCT: CLINE DOORS

PART OR ASSEMBLY: VERTICAL CROSS SECTIONS

NO.	DATE	REVISIONS	BY
5	7/05/23	UPDATE TO 8TH ED. (2023) FBC	LFS
4	8/11/20	UPDATE TO 7TH ED. (2020) FBC	DAC
3	7/7/17	UPDATE TO 6TH ED. (2017) FBC	JK
2	9/9/15	ADD OPAQUE DOOR & NEW SIZE	JK
1	1/27/15	UPDATE TO 5TH ED. (2014) FBC	JK

DATE: 9/5/13
SCALE: N.T.S.
DWG. BY: JK
CHK. BY: LFS
DRAWING NO.: FL-6336.5
SHEET 4 OF 7

© 2013 R.W. Building Consultants Inc.

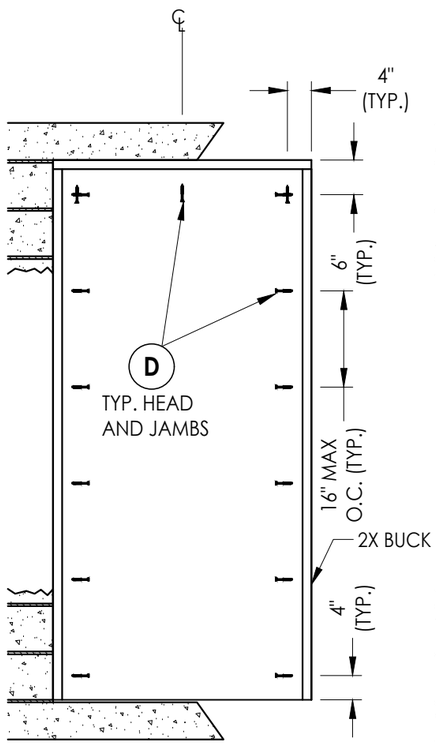

BUCK ANCHORING
Max. D.P. <= 60 PSF

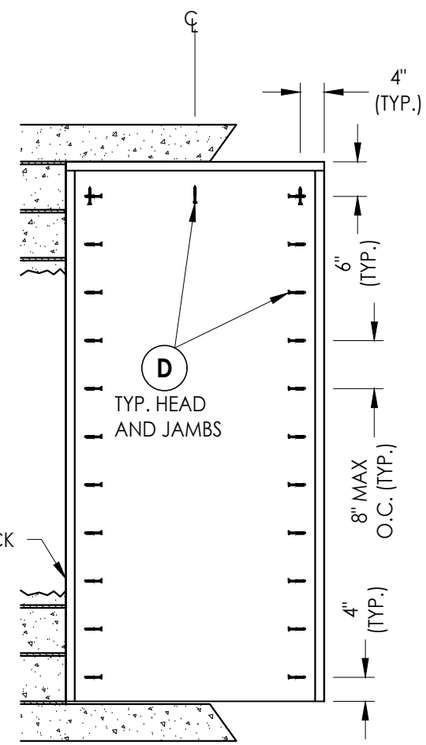

BUCK ANCHORING
Max. D.P. <= 90 PSF

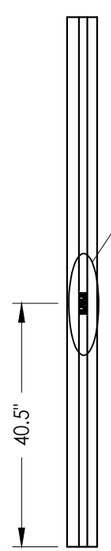

LATCH JAMB

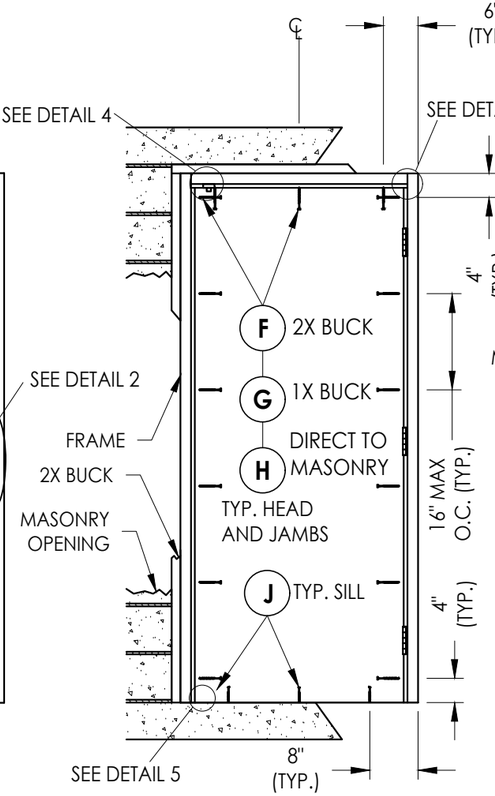

FRAME ANCHORING
Max. D.P. <= 60 PSF

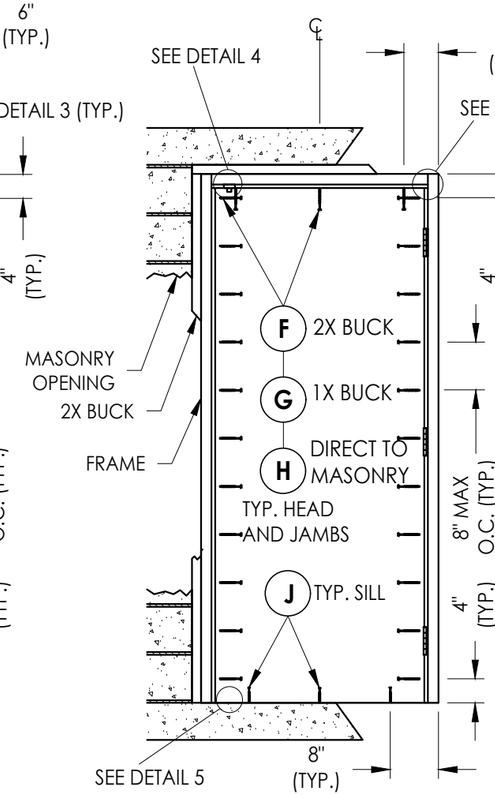

FRAME ANCHORING
Max. D.P. <= 90 PSF

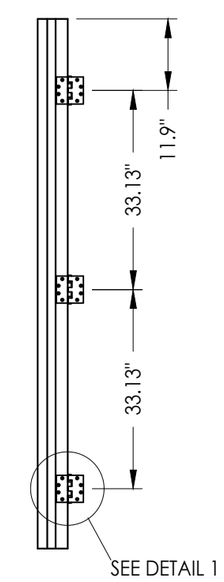

HINGE JAMB

MAX. FRAME DIMENSION 40" X 88"

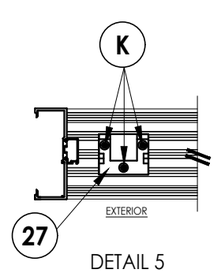

DETAIL 5

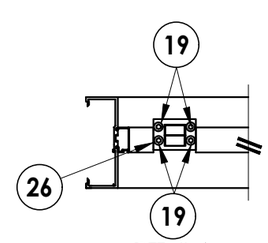

DETAIL 4

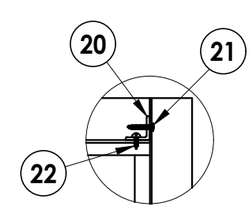

DETAIL 3

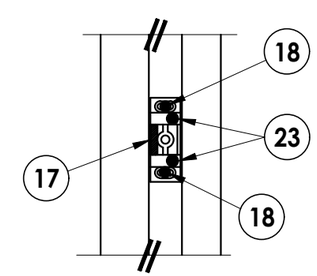

DETAIL 2

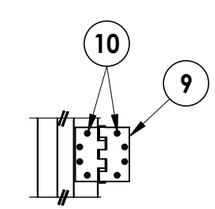

DETAIL 1

CONCRETE ANCHOR NOTES:

1. *Concrete anchor locations at the corners may be adjusted to maintain the min. edge distance to mortar joints.*
2. *Concrete anchor locations noted as "MAX. ON CENTER" must be adjusted to maintain the min. edge distance to mortar joints, additional concrete anchors may be required to ensure the "MAX. ON CENTER" dimension are not exceeded.*
3. *Concrete anchor table:*

ANCHOR TYPE	ANCHOR SIZE	MIN. EMBEDMENT	MIN. CLEARANCE TO MASONRY EDGE	MIN. CLEARANCE TO ADJACENT ANCHOR
ITW BUILDEX TAPCON®	1/4"	1-1/4"	2-1/2"	4"
DeWALT ULTRACON®+	1/4"	1-1/4"	2-1/2"	4"
	3/16"	1-3/4"	2-1/2"	1-3/4"

WOOD SCREW INSTALLATION NOTES:

1. *Maintain a minimum 5/8" edge distance, 1" end distance, & 1" o.c. spacing of wood screws to prevent the splitting of wood.*

Documents Prepared By:
Lyndon F. Schmidt
P.E. No. 43409
RW BUILDING CONSULTANTS, INC.
P.O. Box 230, Valrico, FL 33595
Phone No.: 813.659.9197
FBPE Registry No. 9813

PRODUCT: *CLINE DOORS*

PART OR ASSEMBLY: *BUCK AND FRAME ANCHORING*

REVISIONS

NO.	DATE		BY
5	7/05/23	UPDATE TO 8TH ED. (2023) FBC	LFS
4	8/11/20	UPDATE TO 7TH ED. (2020) FBC	DAC
3	7/7/17	UPDATE TO 6TH ED. (2017) FBC	JK
2	9/9/15	ADD OPAQUE DOOR & NEW SIZE	JK
1	1/27/15	UPDATE TO 5TH ED. (2014) FBC	JK

DATE: 9/5/13
SCALE: N.T.S.
DWG. BY: JK
CHK. BY: LFS
DRAWING NO.: FL-6336.5
SHEET 5 OF 7

© 2013 R.W. BUILDING CONSULTANTS INC.

Z:\2023 FBC Drawings\Cline Aluminum Doors\FL-6336 R9\FL-6336.5-8.dwg

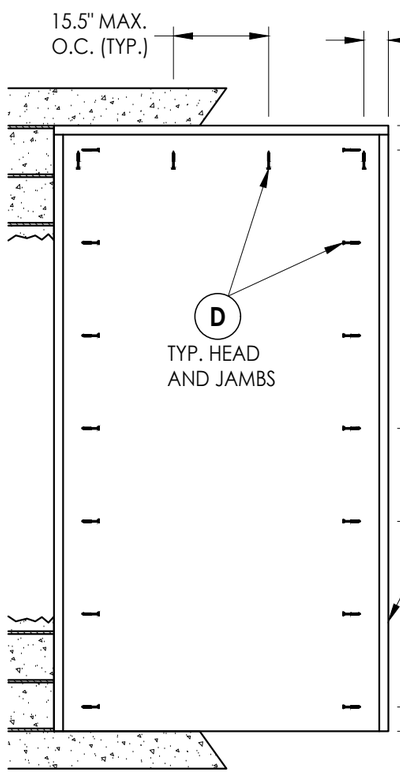

BUCK ANCHORING
Max. D.P. <= 50 PSF

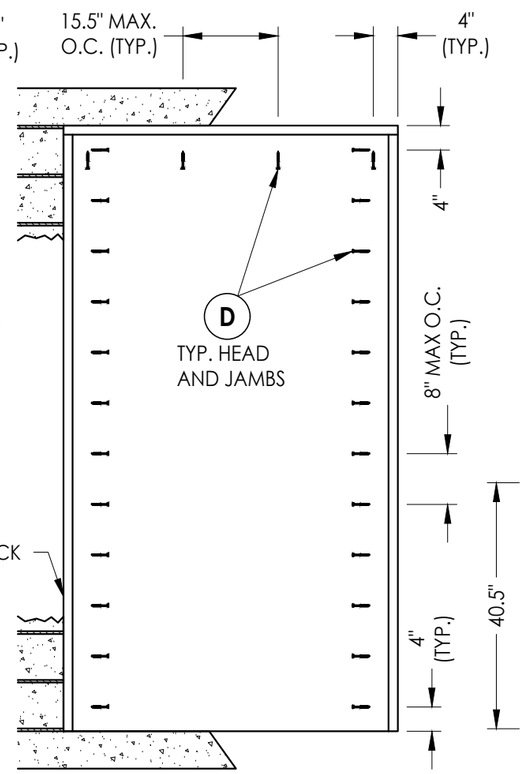

BUCK ANCHORING
Max. D.P. <= 80 PSF

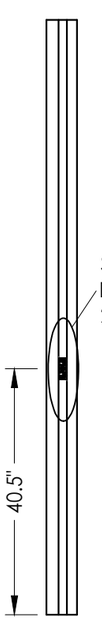

LATCH JAMB

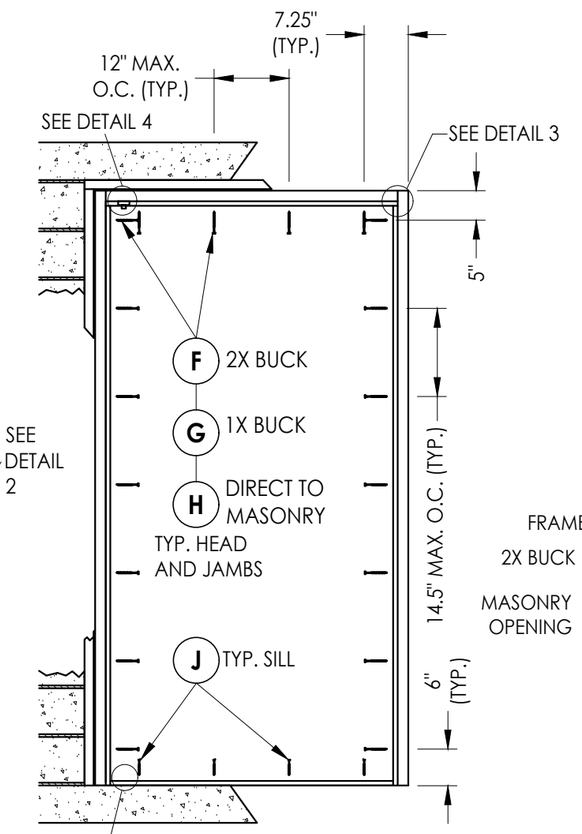

FRAME ANCHORING
Max. D.P. <= 50 PSF

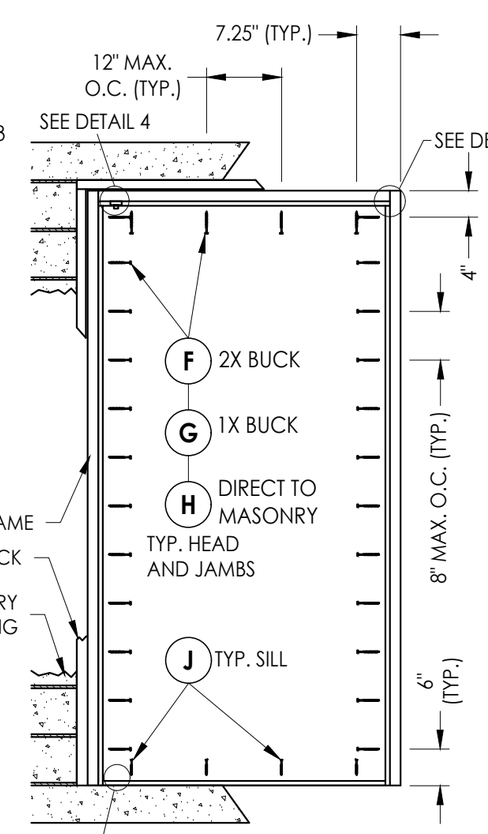

FRAME ANCHORING
Max. D.P. <= 80 PSF

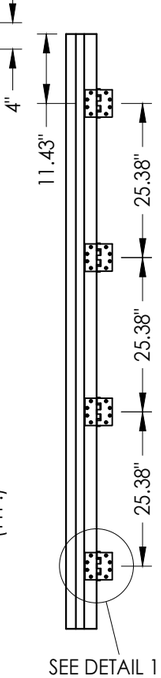

HINGE JAMB

CONCRETE ANCHOR NOTES:

1. *Concrete anchor locations at the corners may be adjusted to maintain the min. edge distance to mortar joints.*
2. *Concrete anchor locations noted as "MAX. ON CENTER" must be adjusted to maintain the min. edge distance to mortar joints, additional concrete anchors may be required to ensure the "MAX. ON CENTER" dimension are not exceeded.*
3. *Concrete anchor table:*

ANCHOR TYPE	ANCHOR SIZE	MIN. EMBEDMENT	MIN. CLEARANCE TO MASONRY EDGE	MIN. CLEARANCE TO ADJACENT ANCHOR
ITW BUILDEX TAPCON®	1/4"	1-1/4"	2-1/2"	4"
DeWALT ULTRACON®+	1/4"	1-1/4"	2-1/2"	4"
	3/16"	1-3/4"	2-1/2"	1-3/4"

WOOD SCREW INSTALLATION NOTES:

1. *Maintain a minimum 5/8" edge distance, 1" end distance, & 1" o.c. spacing of wood screws to prevent the splitting of wood.*

MAX. FRAME DIMENSION 51.5" X 98.0"

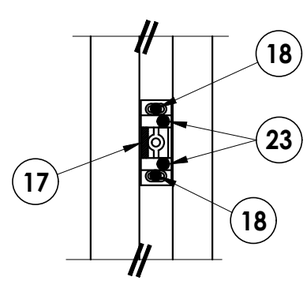

DETAIL 2

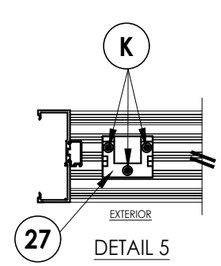

DETAIL 5

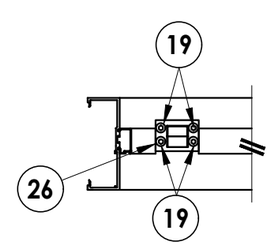

DETAIL 4

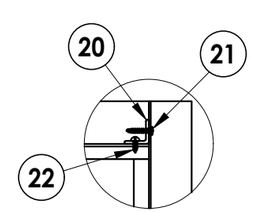

DETAIL 3

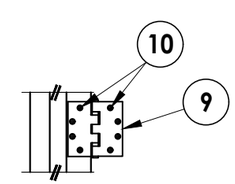

DETAIL 1

Documents Prepared By:
Lyndon F. Schmidt
P.E. No. 43409

RW BUILDING CONSULTANTS, INC.
P.O. Box 230, Valrico, FL 33595
Phone No.: 813.659.9197
FBPE Registry No. 9813

PRODUCT: *CLINE DOORS*

PART OR ASSEMBLY: *BUCK AND FRAME ANCHORING*

REVISIONS

NO.	DATE	BY
5	7/05/23	LFS
4	8/11/20	DAC
3	7/7/17	JK
2	9/9/15	JK
1	1/27/15	JK

UPDATE TO 8TH ED. (2023) FBC
UPDATE TO 7TH ED. (2020) FBC
UPDATE TO 6TH ED. (2017) FBC
ADD OPAQUE DOOR & NEW SIZE
UPDATE TO 5TH ED. (2014) FBC

DATE: 9/5/13
SCALE: N.T.S.
DWG. BY: JK
CHK. BY: LFS
DRAWING NO.: FL-6336.5
SHEET 6 OF 7

© 2013 R.W. Building Consultants Inc.

Z:\2023 FBC Drawings\Cline Aluminum Doors\FL-6336 R9\FL-6336.5-8.dwg

BILL OF MATERIALS

ITEM #	DESCRIPTION	MATERIAL
A	1X BUCK SG >= 0.55	WOOD
B	2X BUCK SG >= 0.55	WOOD
C	1/4" MAX. SHIM SPACE	-
D	1/4" X 2-3/4" PFH DeWALT OR ITW CONCRETE SCREW	STEEL
E	MASONRY - 3,000 PSI MIN. CONCRETE CONFORMING TO ACI 301 OR HOLLOW BLOCK CONFORMING TO ASTM C90	CONCRETE
F	1/4" X 3-1/2" HH LAG SCREW (1.5" MIN. EMBEDMENT)	STEEL
G	1/4" X 4" HWH DeWALT OR ITW CONCRETE SCREW	STEEL
H	1/4" x 3-1/4" HWH DeWALT OR ITW CONCRETE SCREW	STEEL
J	1/4" x 1-3/4" HWH DeWALT OR ITW CONCRETE SCREW	STEEL
K	3/16" x 2-1/4" PFH DeWALT CONCRETE SCREW	STEEL
1	FRAME	ALUM 6063 T5
2	FRAME STOP	ALUM 6063 T5
3	5" SLIP PLATE	ALUM 6063 T5
4	HINGE REINFORCEMENT	ALUM
8	WOOL PILE WEATHERSTRIP	-
9	4-1/2" X 4-1/2" HINGE	STEEL
10	1/4 - 20 x 1/2" PFH MACHINE SCREW	STEEL
17	CENTER BOLT ROLLER STRIKE PLATE	STEEL
18	#12-24 X 2" FH MACHINE SCREW	STEEL
19	1/4 - 20 x 1" PFH MACHINE SCREW	STEEL
20	CORNER REINFORCEMENT (1" X 1" X 1/8" X 4.75" LONG ANGLE)	ALUM
21	#10 X 1" PPH SMS	STEEL
22	#10 X 1/2" PPH SMS	STEEL
23	#8 X 2" CAP SCREW	STEEL
24	DOOR SWEEP (PEMKO 345AV)	-
25	#6 X 5/8" PPH SMS	STEEL
26	TOP LATCH STRIKE HOUSING	STEEL
27	BOTTOM BOLT STRIKE PLATE	STEEL
32	ADA THRESHOLD (PEMKO 171A)	ALUM
40	DOOR PANEL (SEE DOOR PANEL DETAILS)	-

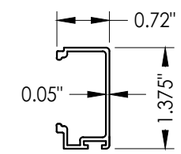

2 FRAME STOP

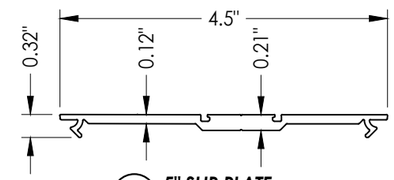

3 5" SLIP PLATE
Full length of head/jambs

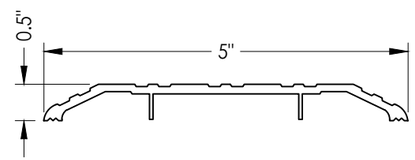

32 ADA THRESHOLD
(PEMKO 171A)

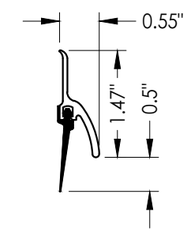

24 DOOR SWEEP
(PEMKO 345AV)

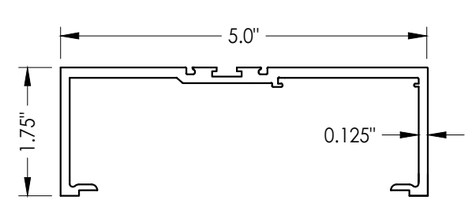

1 FRAME

Documents Prepared By:
Lyndon F. Schmidt
P.E. No. 43409

RW BUILDING CONSULTANTS, INC.
P.O. Box 230, Valrico, FL 33595
Phone No.: 813.659.9197
FBPE Registry No. 9813

PRODUCT: CLINE DOORS

PART OR ASSEMBLY: BILL OF MATERIALS & COMPONENTS

NO.	DATE	REVISIONS	BY
5	7/05/23	UPDATE TO 8TH ED. (2023) FBC	LFS
4	8/11/20	UPDATE TO 7TH ED. (2020) FBC	DAC
3	7/7/17	UPDATE TO 6TH ED. (2017) FBC	JK
2	9/9/15	ADD OPAQUE DOOR & NEW SIZE	JK
1	1/27/15	UPDATE TO 5TH ED. (2014) FBC	JK

DATE: 9/5/13
SCALE: N.T.S.
DWG. BY: JK
CHK. BY: LFS
DRAWING NO.: FL-6336.5
SHEET 7 OF 7

© 2013 R.W. BUILDING CONSULTANTS INC.

Z:\2023 FBC Drawings\Cline Aluminum Doors\FL-6336 R9\FL-6336.5-8.dwg